23X/30X/36X/42X AI Speed Dome Network Camera

IP66

IK10

DATASHEET

KEY FEATURES

- Smart IR II (Combining the High Beam and Low Beam to adjust IR intensity to fit different lighting conditions.)
- 140dB Super WDR (Excellent performance even when the ratio of the luminosity of brightest and darkest is up to 140dB.)
- 100fps High Frame Rate (Camera can easily catch images with no latency despite of the high-speed movement.)
- 0.001Lux Starlight (Deliver high detailed color images even in low light environment reaching 0.001Lux.)
- Smart PTZ Motion Detection (Pan and tilt to the position of motion detected area automatically and zoom in synchronously.)
- IR Distance up to 300m (Enabling 300 meters distinct images at night with IR LEDs.)
- 255 Preset Positions (The user can easily control the lens position via mouse to monitor interested area and set up to 255 preset positions for patrolling.)
- Keyboard Control (Shortcut keys for PTZ control via Milesight Keyboard.)
- Smart Stream (Bandwidth, storage and bit rate are saved with Smart Stream On, eg, H.265$^+$ saves 70%~80% bandwidth that of H.264.)

AI Video Analytics

- 8 intelligent VCA modes powered by AI engine, which can intelligently filter objects to focus on human and vehicle detection.
- People Counting technology provides high accuracy and real-time data based on AI algorithm with statistic reports.
- Face Detection function detects human faces in the monitoring scene and captures the snapshots, which greatly enhances the monitoring efficiency.

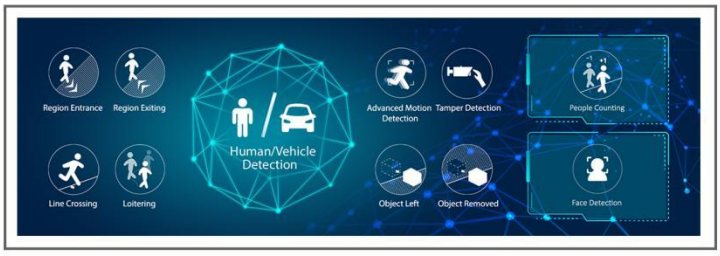

Intelligent PTZ Auto Tracking

With AI detection, Milesight Network Camera could leverage motor mechanism to perform Pan/Tilt/Zoom to track the moving human or vehicle automatically and adjust zoom status flexibly according to the target distance with the powerful optical zoom capability.

Up to 42X Optical Zoom

Embedded with optical zoom lens, the cameras' resolution is up to 42X optical zoom which allows the user to zoom up to distant objects while still maintaining the clarity and delivering high quality video over the entire zoom range.

30fps@4K

Providing 4K HD resolution with frame rate of 30fps, the camera performs well in catching detailed image regardless of the moving speed.

23X/30X/36X/42X AI Speed Dome Network Camera

	Model	MS-C2841-X36(R)(T) PC (2MP)	MS-C2941-X23(R)(T) PC (2MP)	MS-C2941-X30(R)(T) PC (2MP)	MS-C2941-X42(R)(T) PC (2MP)
Camera	Image Sensor	1/2" Progressive Scan CMOS	1/2.8" Progressive Scan CMOS		
	Min. Illumination	Color: 0.001Lux@F1.2 Color: 0.002Lux@F1.55 B/W: 0Lux with IR on	Color: 0.002Lux@F1.2 Color: 0.005Lux@F1.5 B/W: 0Lux with IR on		Color: 0.002Lux@F1.2 Color: 0.005Lux@F1.8 B/W: 0Lux with IR on
	WDR	140dB Super WDR			
	Shutter Time	1/100000s~1s			
	Digital Zoom	16X			
	Day/Night Mode	Day/Night/Auto/Customize/Schedule			
	S/N	>55dB			
Lens	Focal Length	5.7~205.2mm, **36X** Optical Zoom	5~117mm, **23X** Optical Zoom	4.7~141mm, **30X** Optical Zoom	7~300mm, **42X** Optical Zoom
	Zoom Speed	Approx 7s (Wide-Tele)	Approx 6s (Wide-Tele)	Approx 6s (Wide-Tele)	Approx 7s (Wide-Tele)
	Field of View	H63°~H3°/D69°~D3°/ V38°~V1°	H60°~H3°/D69°~D4°/ V35°~V2°	H62°~H3°/D70°~D3°/ V37°~V1°	H45°~H2°/D50°~D2°/ V27°~V1°
	Focus Control	Auto/Semi-Auto/Manual			
	Minimum Working Distance	1500/1500mm (Wide/Tele)	100/1500mm (Wide/Tele)	100/1500mm (Wide/Tele)	1200/1500mm (Wide/Tele)
	Aperture	F1.55~F4.8	F1.5~F3.5	F1.5~F4.0	F1.8~F6.5
	Iris Control	Auto			
PTZ	Pan Range/Pan Speed	360°endless / Pan Manual Speed: 0.1°~400°/s, Pan Preset Speed: 400°/s			
	Tilt Range/Tilt Speed	0°~90°(Auto Flip) / Tilt Manual Speed: 0.1°~320°/s, Tilt Preset Speed: 320°/s			
	Proportional Zoom	Support			
	Preset Quantity	255			
	Patrol	8 Patrols, up to 48 presets each patrol			
	Pattern	4 Patterns			
	Auto Tracking	Support			
	Power Off Memory	Support			
	Other Function	Auto Scan, Auto Home, Preset Freezing, 3D Positioning, PTZ Limits, Initial Position			
IR	IR Distance	Up to 300m	Up to 200m	Up to 200m	Up to 300m
	IR Angle	Auto/Manual			
Video	Max. Image Resolution	1920x1080			
	Primary Stream	**100fps@(1920x1080)(Optional for T Series),** 60fps@(1920x1080, 1280x960, 1280x720, 704x576)			
	Secondary Stream	60fps@(704x576, 640x480, 640x360, 352x288, 320x240, 320x192, 320x180)			
	Tertiary Stream	30fps@(1920x1080, 1280x720, 704x576, 640x480, 640x360, 320x240, 320x192, 320x180)			
	Video Compression	H.265+/H.265(HEVC)/H.264+/H.264/MJPEG			
	Video Bit Rate	16Kbps~16Mbps(CBR/VBR Adjustable)			
	Privacy Masking	Up to 8 areas			
	ROI	Up to 8 areas			
	Image Setting	Brightness/Contrast/Saturation/Sharpness			

23X/30X/36X/42X AI Speed Dome Network Camera

Interface	Ethernet	1*RJ45 10M/100M Ethernet Port		
	Audio I/O	1/1		
	Alarm I/O	4/2		
	RS485	Support		
Network	Network Storage	NAS(Support NFS, SMB/CIFS), ANR		
	Protocol	IPv4/IPv6, ARP, TCP, UDP, RTCP, RTP, RTSP, RTMP, HTTP, HTTPS, DNS, DDNS, DHCP, FTP, NTP, SMTP, SNMP, UPnP, Bonjour, SIP, PPPoE, VLAN, 802.1x, QoS, IGMP, ICMP, SSL		
Audio	Audio Compression	G.711/AAC/G.722/G.726		
	Audio Sampling Rate	8/16/32/44.1/48KHz		
	Audio Bit Rate	16~256kbps		
	Two-way Audio	Support		
Intelligent Analytics	Video Analysis	Region Entrance, Region Exiting, Advanced Motion Detection, Tamper Detection, Line Crossing, Loitering, Object Left, Object Removed		
	Face detection	Detect and capture faces, get real-time snapshots		
	People Counting&Report	Count the number of people entering or exiting, Up to 4 detection areas for regional people counting		
System	Storage	Support microSD/SDHC/SDXC Card Local Storage, up to 256G		
	Advanced Function	BLC, HLC, 2D DNR, 3D DNR, Defog, AWB, EIS, IP Address Filtering, AGC, Anti-flicker, Corridor Mode, Deblur, Watermark		
	SIP/VoIP Support	Yes, Voice & Video-over-IP		
	Event Trigger	Motion Detection, Network Disconnection, External Input, Audio Alarm, etc.		
	Event Action	FTP Upload, SMTP Upload, SD Card Record, External Output, SIP Phone, PTZ Motion, HTTP Notification, etc.		
	System Compatibility	ONVIF Profile G & Q & S & T, API		
General	Working Condition	Temperature: -40℃~60℃ / Humidity: 0~90%(Non-condensing)		
	Power Supply	PoE (802.3at) / AC 24V/3A±10%		
	Power Consumption	13W MAX / 23W MAX (With IR on)	12W MAX / 24W MAX (With IR on)	12W MAX / 23W MAX (With IR on)
	Weather Proof/Housing	Up to IP66-rated for Weather-resistant Performance / Vandal-proof IK10-rated Metal Housing(Optional)		
	Heater	Support		
	Surge Protection	6KV		
	Dimensions/Weight	Φ205mmX308mm/4Kg		
	Warranty	2 Years / 3 Years (Optional)		

23X/30X/36X/42X AI Speed Dome Network Camera

	Model	MS-C5341-X23PC (5MP)	MS-C5341-X30PC (5MP)	MS-C5341-X42PC (5MP)	MS-C8241-X36PC (4K)
Camera	Image Sensor	1/2.8" Progressive Scan CMOS			1/1.8" Progressive Scan CMOS
	Min. Illumination	Color: 0.005Lux@F1.2 Color: 0.008Lux@F1.5 B/W: 0Lux with IR on		Color: 0.005Lux@F1.2 Color: 0.008Lux@F1.8 B/W: 0Lux with IR on	Color: 0.006Lux@F1.2 Color: 0.009Lux@F1.55 B/W: 0Lux with IR on
	WDR	120dB Super WDR			
	Shutter Time	1/100000s~1s			
	Digital Zoom	16X			
	Day/Night Mode	Day/Night/Auto/Customize/Schedule			
	S/N	>55dB			
Lens	Focal Length	5~117mm, **23X** Optical Zoom	4.7~141mm, **30X** Optical Zoom	7~300mm, **42X** Optical Zoom	5.7~205.2mm, **36X** Optical Zoom
	Zoom Speed	Approx 6s (Wide-Tele)	Approx 6s (Wide-Tele)	Approx 7s (Wide-Tele)	Approx 7s (Wide-Tele)
	Field of View	H55°~H3°/D68°~D4° /V42°~V2°	H58°~H3°/D71°~D3° /V44°~V2°	H43°~H2°/D53°~D2° /V33°~V1°	H66°~H3°/D72°~D3° /V41°~V1°
	Focus Control	Auto/Semi-Auto/Manual			
	Minimum Working Distance	100/1500mm (Wide/Tele)	100/1500mm (Wide/Tele)	1200/1500mm (Wide/Tele)	1500/1500mm (Wide/Tele)
	Aperture	F1.5~F3.5	F1.5~F4.0	F1.8~F6.5	F1.55~F4.8
	Iris Control	Auto			
PTZ	Pan Range/Pan Speed	360°endless / Pan Manual Speed: 0.1°~400°/s, Pan Preset Speed: 400°/s			
	Tilt Range/Tilt Speed	0°~90°(Auto Flip) / Tilt Manual Speed: 0.1°~320°/s, Tilt Preset Speed: 320°/s			
	Proportional Zoom	Support			
	Preset Quantity	255			
	Patrol	8 Patrols, up to 48 presets each patrol			
	Pattern	4 Patterns			
	Auto Tracking	Support			
	Power Off Memory	Support			
	Other Function	Auto Scan, Auto Home, Preset Freezing, 3D positioning, PTZ Limits, Initial Position			
IR	IR Distance	Up to 200m		Up to 300m	
	IR Angle	Auto/Manual			
Video	Max. Image Resolution	2592x1944			3840x2160
	Primary Stream	30fps@(2592x1944), 45fps@(2048x1536) 60fps@(1920x1080, 1280x960, 1280x720, 704x576)			30fps@(3840x2160, 3072x2048, 2592x1944, 2592x1520, 2048x1536, 1920x1080, 1280x960, 1280x720, 704x576)
	Secondary Stream	60fps@(704x576, 640x480, 640x360, 352x288, 320x240, 320x192, 320x180)			30fps@(704x576, 640x480, 640x360, 352x288, 320x240, 320x192, 320x180)
	Tertiary Stream	30fps@(1920x1080, 1280x720, 704x576, 640x480, 640x360, 320x240, 320x192, 320x180)			
	Video Compression	H.265+/H.265(HEVC)/H.264+/H.264/MJPEG			
	Video Bit Rate	16Kbps~16Mbps(CBR/VBR Adjustable)			
	Privacy Masking	Up to 8 areas			
	ROI	Up to 8 areas			
	Image Setting	Brightness/Contrast/Saturation/Sharpness			

23X/30X/36X/42X AI Speed Dome Network Camera

Interface	Ethernet	1*RJ45 10M/100M Ethernet Port
	Audio I/O	1/1
	Alarm I/O	4/2
	RS485	Support
Network	Network Storage	NAS(Support NFS, SMB/CIFS), ANR
	Protocol	IPv4/IPv6, ARP, TCP, UDP, RTCP, RTP, RTSP, RTMP, HTTP, HTTPS, DNS, DDNS, DHCP, FTP, NTP, SMTP, SNMP, UPnP, Bonjour, SIP, PPPoE, VLAN, 802.1x, QoS, IGMP, ICMP, SSL
Audio	Audio Compression	G.711/AAC/G.722/G.726
	Audio Sampling Rate	8/16/32/44.1/48KHz
	Audio Bit Rate	16~256kbps
	Two-way Audio	Support
Intelligent Analytics	Video Analysis	Region Entrance, Region Exiting, Advanced Motion Detection, Tamper Detection, Line Crossing, Loitering, Object Left, Object Removed
	Face detection	Detect and capture faces, get real-time snapshots
	People Counting&Report	Count the number of people entering or exiting, Up to 4 detection areas for regional people counting
System	Storage	Support microSD/SDHC/SDXC Card Local Storage, up to 256G
	Advanced Function	BLC, HLC, 2D DNR, 3D DNR, Defog, AWB, EIS, IP Address Filtering, AGC, Anti-flicker, Corridor Mode, Deblur, Watermark
	SIP/VoIP Support	Yes, Voice & Video-over-IP
	Event Trigger	Motion Detection, Network Disconnection, External Input, Audio Alarm, etc.
	Event Action	FTP Upload, SMTP Upload, SD Card Record, External Output, SIP Phone, PTZ Motion, HTTP Notification, etc.
	System Compatibility	ONVIF Profile G & Q & S & T, API
General	Working Condition	Temperature: -40℃~60℃ / Humidity: 0~90%(Non-condensing)
	Power Supply	PoE (802.3at) / AC 24V/3A±10%
	Power Consumption	12W MAX / 25W MAX (With IR on) / 13W MAX /25W MAX (With IR on)
	Weather Proof/Housing	Up to IP66-rated for Weather-resistant Performance / Vandal-proof IK10-rated Metal Housing(Optional)
	Heater	Support
	Surge Protection	6KV
	Dimensions/Weight	Φ205mmX308mm/4Kg
	Warranty	2 Years / 3 Years (Optional)

23X/30X/36X/42X AI Speed Dome Network Camera

Structure Diagrams

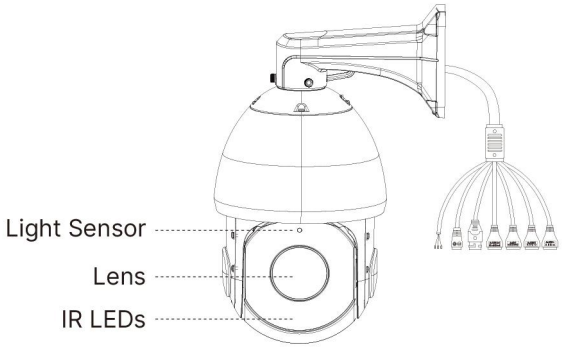

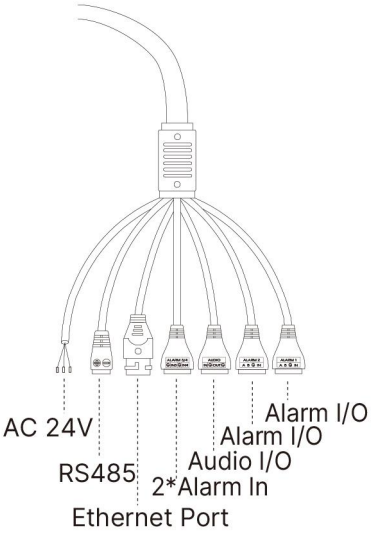

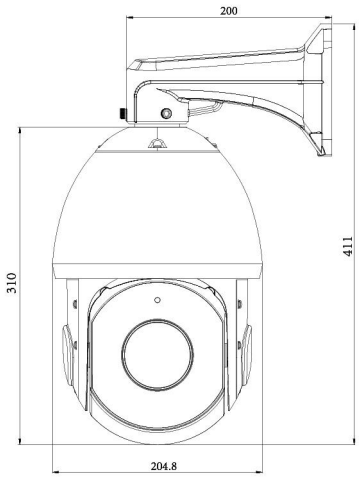

Wall Mount

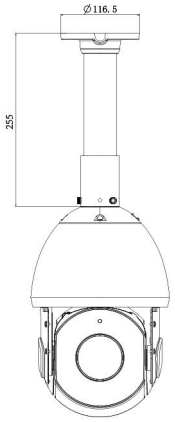

Ceiling Mount

Units: mm

Accessories Support

A01 Pole Mount

Weight: 720g
Dimensions: 170*51.5*152.6mm

A03 External Corner Bracket

Weight: 900g
Dimensions: 170*152.5*76.3mm

A41 Wall Mount

Weight: 400g
Dimensions: 200*129*100mm

A42 Pendant Mount

Weight: 650g
Dimensions: 116.5*255mm

A42-L Extension Lever

Weight: 325g
Dimension: 57*255mm

A43 Junction Box

Weight: 1000g
Dimensions: 195*164*80mm

Milesight Technology Co., Ltd. | www.milesight.com
Contact Us: sales@milesight.com support@milesight.com

Add: 220 NE 51st Street, Oakland Park, Florida 33334, USA
Tel: +1-800-561-0485

Add: 925, Anyang SK V1 Center, LS -ro 116beon-gil, Dongan-gu, Anyang-si, Korea
Tel: +82-31-990-7732

Add: No.23 Wanghai Road, 2nd Software Park, Xiamen, China
Tel: +86-592-5922772