Datasheet

Cloud L2+ Managed Outdoor Gigabit PoE Switch

WI-PCMS310GF-O Hardware Version: V2

Overview

Wi-Tek Cloud L2+ Managed Outdoor Gigabit PoE Switches are designed to address the unique challenges of variable weather environments, providing high-performance, robust L2 and L2+ features such as static routing, ERPS, DHCP server, enterprise-grade QoS, and advanced security policy capabilities. IP-MAC-Port Binding (IMPB) and Access Control List (ACL) features protect against broadcast storms, ARP and Denial of Service (DoS) attacks, and more. Quality of Service (QoS, L2 to L4) provides enhanced traffic management capabilities to make data transfer smoother and faster. Wi-Tek Cloud management provides a more efficient, simple, secure, and easy-to-use remote management method. It supports intelligent deployment, automatic networking, abnormal alarm, and other functions, making it easy to manage and maintain. Cloud L2+ Managed Outdoor Gigabit PoE Switch is a high performance, reliable network solution with rich management features, making it the perfect choice for outdoor CCTV/WLAN solutions.

Features

Abundant L2 and L2+ features

Cloud L2+ Managed Outdoor Gigabit PoE Switch support a complete lineup of L2 features, including 802.1Q VLAN, Port Mirroring, STP/RSTP/MSTP, ERPS, DHCP server, Link Aggregation Control Protocol, and 802.3x Flow Control function. Any more, the switch provides advanced features for network maintenance, such as Loopback Detection, Cable Diagnostics, and IGMP Snooping. Moreover, L2+ managed switches support L2+ feature-static routing, which is a simple way to provide segmentation of the network with internal routing through the switch and helps network traffic for more efficient use.

Cloud Platform Remote Management

Not only supports web interface and CLI management but also supports Wi-Tek Cloud platform remote management. Users can view the network status, modify the configuration, and troubleshoot at home.

Networking Security

The Cloud L2+ Managed PoE switches provide IP-MAC-Port Binding, Port Security, Storm control and DHCP Snooping which protect against broadcast storms, DOS attacks, etc. In addition, the Access Control Lists (ACL, L2 to L4) feature restricts access to sensitive network resources by denying packets based on source and destination MAC address, IP address, TCP/UDP ports and even VLAN ID. Moreover, the switch supports 802.1X authentication, which is used in conjunction with a RADIUS/TACACS+ server to require some authentication information before access to the network is allowed.

IP65 Waterproof and Dustproof Enclosure Design

It adopts a high-weather-resistant shell and provides dustproof and waterproof capabilities. It can work normally in extreme environments as low as -30°C and as high as 60°C, without fear of wind, sun, rain, and snow.

Specifications

Model	WI-PCMS310GF-O
Hardware Version	V2
Interfaces	
Downlink Port	8*10/100/1000Mbps RJ45 PoE Ports
Uplink Port	2*100/1000Mbps SFP Slots
PoE	
PoE Port	Port 1-8
PoE Standard	Port 1-2: 802.3af/at/bt Port 3-8: 802.3af/at
PoE Pin Assignment	1/2(-), 3/6(+) and 4/5(+), 7/8(-)
PoE Power	90W max for port 1-2, 30W max for port 3-8; 110W max. (PoE power budget)
Performance	
Memory and Flash	Memory: 128MB Flash: 32MB
Switch Property	
Standards and Protocols	IEEE 802.3 IEEE802.1d IEEE 802.3u IEEE802.1W IEEE802.3ab IEEE802.3ad IEEE802.3x IEEE802.3af IEEE802.1x IEEE802.3at IEEE802.1q IEEE802.3bt IEEE802.1p
Forwarding Mode	Store and Forward
Switching Capacity	20Gbps
Packet Forwarding Rate	14.88Mpps
MAC Address Table	8k
Packet Buffer Memory	4.1Mbit
Jumbo Frame	10000Byte

Model	WI-PCMS310GF-O
Power Supply	
Input Power	100~240V AC 50/60Hz
Power Consumption	Idle: 5W 100% Traffic Rate with PoE: 115W
Physical Characteristics	
LED Indicators	**PWR(Green)** On: The device power on is normal Off: The device is power o ffor failed **SYS(Green)** Blinking: The Device system is operating normally Off: Device system or power connection abnormality **PoE(Orange)** On: PoE enabled Off: PoE disabled **Link(Orange)** On: Port connected Off: Port disconnected Blinking: Data transmission
Buttons	
Reset	Hold for>5 sec, to restore factory default
Fan Quantity	Fanless
Switch Dimensions	314*210*89 mm
Package Dimensions	405*253*97 mm
Weight	Net Weight: 1.42 kg
	Package Weight: 2.35 kg
Installation	Wall-mounted, Pole-mounted

Model		WI-PCMS310GF-O
Environmental		
Reliability	Surge Immunity	IEC 61000-4-5 Common mode 4kV Differential mode 2kV
	ESD Protection	IEC 61000-4-2 Contact discharge 6kV Air discharge 8kV
MTBF		99651H
Operating Environment		-30℃-60℃ (-22℉-122℉); 10-90% RH non-condensing
Storage Environment		-40℃-70℃ (-40℉-158℉); 5—90% RH non-condensing
Certification		
Certification		CE, FCC, RoHS, UKCA, RCM

Model	WI-PCMS310GF-O
Software Features	
QoS	8 priority queues
	802.1p CoS/DSCP priority
	Queue scheduling(SP (Strict Priority);WRR (Weighted Round Robin);SP+WRR
	Bandwidth Control(Port/Flow based Rating Limiting)
	Policy Config
	Class-Map Config
	Policy-Map Config
	Policy Mark Config
	Policy Bandwidth
	Policy VLAN
L2+	IPv4/IPv6 Interfaces
	Static Routing(512 static routes)
	Static ARP
	8K ARP Entries
	ARP timeout
	Gratuitous ARP
	DHCP Server
	DHCP Relay
	DHCP L2 Relay
Link Aggregation	Static link aggregation
	802.3ad LACP
	Up to 8 aggregation groups and up to 8 ports per group
Spanning Tree Protocol	802.1d STP
	802.1w RSTP
	802.1s MSTP
	STP Security: TC Protect, BPDU Filter, BPDU Protect, Root Protect, Loop Protect

Model	WI-PCMS310GF-O
Loopback Detection	Port-based
	VLAN based
Flow Control	802.3x Flow Control
	HOL Blocking Prevention
Mirroring	Port Mirroring
	CPU Mirroring
	One-to-One
	Many-to-One
	Tx/Rx/Both
L2 Multicast	Supports IPv4/IPv6 IGMP groups
	IGMP Snooping
	IGMP v1/v2/v3 Snooping
	Immediately-leave
	IGMP Snooping Querier
	IGMP Authentication
	IGMP Proxy
	MVR
	MLD Snooping
	MLD v1/v2 Snooping
	Immediately-leave
	MLD Snooping Querier
	Static Group Config
	Limited IP Multicast
	Multicast Filtering
VLAN	VLAN Group
	Max. 4K VLAN Groups
	802.1Q tag VLAN
	MAC VLAN
	Protocol VLAN

Model	WI-PCMS310GF-O
VLAN	GVRP
	Voice VLAN
	Port-Based QinQ
	Tunnel TPID（0x8100，0x9100，0x9200，Protocol ID）
	OUI-Based VLAN
Access Control List	MAC ACL
	Source MAC
	Destination MAC
	Packet Type（Untagged-eth2，Untagged-802.3，Tagged-eth2，Tagged-802.3）
	VLAN ID
	Ether Type
	IP ACL
	Source IP
	Destination IP
	Fragment Packet
	IP Protocol
	IP Precedence
	TCP/UDP Port
	DSCP/IP TOS
	Combined ACL
	IPv6 ACL
	icmp/tcp/udp
	Mirroring
	Attached Direction(Ingress/Traffic-statistic)
	QoS Remark
	ACL apply to Port/VLAN
	Time-based ACL
Security	IP-MAC-Port Binding
	DHCP Snooping
	ARP Inspection
	IPv4 secure-port

Model	WI-PCMS310GF-O
Security	DHCPv6 Snooping
	snooping remote-id
	snooping subscriber-id
	IPv6 security-ra
	DoS Defend
	DHCP Filter
	Static/Dynamic Port Security
	Broadcast/Multicast/Unicast Storm Control
	kbps/pps control mode
	802.1X
	Port base authentication
	Mac base authentication
	VLAN Assignment
	Guest VLAN
	Support RADIUS authentication and accountability
	AAA (including TACACS+)
	Port Isolation
	Secure web management through HTTPS with SSLv3/TLS 1.2
	Secure Command Line Interface (CLI) management with SSHv1/SSHv2
	IP/Port/MAC-based access control
IPv6	IPv6 Dual IPv4/IPv6
	Multicast Listener Discovery (MLD) Snooping
	IPv6 ACL
	IPv6 Interface
	Static IPv6 Routing
	IPv6 neighbor discovery (ND)
	Path maximum transmission unit (MTU) discovery
	Internet Control Message Protocol (ICMP) version 6
	TCPv6/UDPv6
	IPv6 applications
	DHCPv6 Client

Model	WI-PCMS310GF-O
IPv6	Ping(v6)
	Tracert(v6)
	Telnet (v6)
	IPv6 SNMP
	IPv6 SSH
	IPv6 SSL
	Http/Https
Advanced Features	802.3ah Ethernet Link OAM
	ERPS
	Cloud Management
	ONVIF(ONVIF Detection,ONVIF Server(NLM))
	Batch Firmware Upgrading
	Intelligent Network Monitoring Abnormal Event Warnings
	Automatic Device Discovery
	Support Remote Management
	Support Cloud VLAN Configuration
	Support Topology Display
	Support Cloud Control Port Configuration
Management Features	Web-based GUI
	Command Line Interface (CLI) through console port, telnet
	SNMPv1/v2c/v3
	Trap/Inform
	RMON (1, 2, 3, 9 groups)
	DHCP/BOOTP Client
	802.1ab LLDP/LLDP-MED

Model	WI-PCMS310GF-O
Management Features	CPU Monitoring
	Cable Diagnostics
	EEE
	Password Recovery
	SNTP
	System Log
System	Ping
	Traceroute
	Firmware Upgrade
	DDMI

WI-PCMS310GF-O

Dimensions (mm)

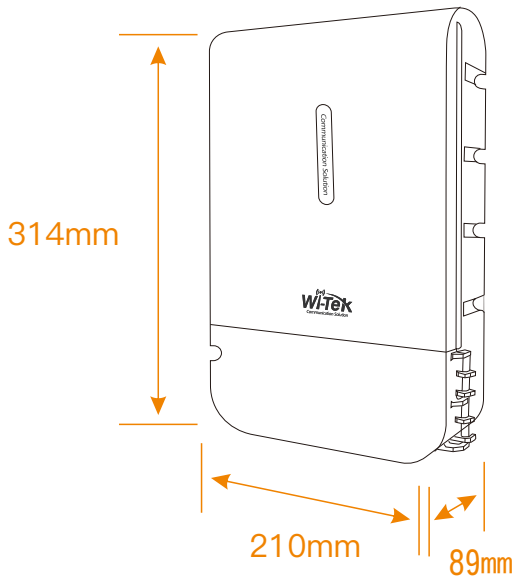

Front Panel

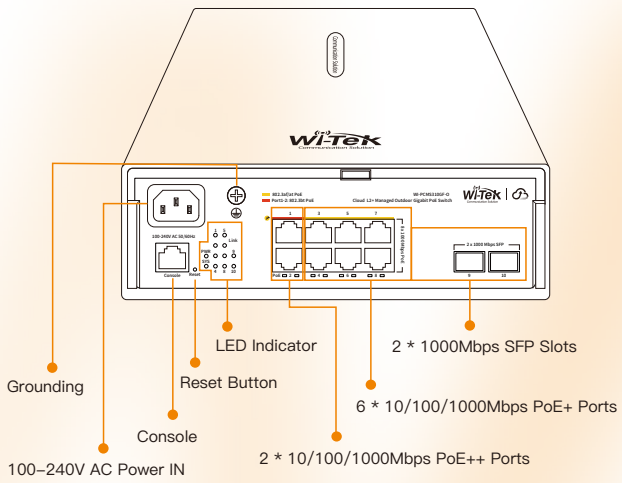

Package Contents

Welcome to order our products. After purchasing, you will receive:

Items	Quantity
Switch	1 pcs
Rubber Plug	2 pcs
Wall Hanging Positioning Sticker	1 pcs
Power Cord	1 pcs
Metal Tie Accessory	2 pcs
Quick Installation Guide	1 pcs
M36 Waterproof Gland(Optional)	2 pcs

Wireless-Tek Technology Limited
Address:Building 3, Units 1801-1807, 1812, Huaqiang Era Plaza, Tangwei Community, Fuhai Street, Bao'an District, Shenzhen City, Guangdong Province, China.
Website:www.wireless-tek.com
Tel:86-0755-32811290
Email:sales@wireless-tek.com
Technical Support:tech@wireless-tek.com

Technical Support

Cloud Management

Company Website

©2025 Wireless-tek Technology Limited. All Rights Reserved.
Version,V1.0, updated 2025.05.15.
The information in this document is subject to change without notice.
Every effort has been made in the preparation of this document to ensure accuracy of the contents, but all statements, information, and recommendations in this document do not constitute a warranty of any kind, express or implied.