DS-7604NXI-K1(D)
4-ch 1U K Series AcuSense 4K NVR

Key Feature

- Up to 4-ch IP camera inputs
- H.265+/H.265/H.264+/H.264 video formats
- Up to 2-ch@12 MP or 4-ch@8 MP or 8-ch@4 MP or 16-ch@1080p decoding capacity
- Up to 40 Mbps incoming bandwidth
- Adopt Hikvision Acusense technology to minimize manual effort and security costs

Smart Function

- 1-ch video analysis for human and vehicle recognition to reduce false alarm
- 1-ch facial recognition for video stream, or 2-ch facial recognition for face picture
- Smart search for the selected area in the video, and smart playback to improve the playback efficiency

Professional and Reliability

- H.265+ compression effectively reduces the storage space by up to 75%
- Adopt stream over TLS encryption technology which provides more secure stream transmission service

HD Video Output

- Provide simultaneous HDMI and VGA outputs
- HDMI video output at up to 4K resolution

Storage and Playback

- Up to 1 SATA interface for HDD connection (up to 10 TB)
- 4-ch synchronous playback

Network & Ethernet Access

- 1 self-adaptive 10/100 Mbps Ethernet interface
- Hik-Connect for easy network management

▪ Specification

Intelligent Analytics	
AI by Device	Facial recognition, perimeter protection, motion detection 2.0
AI by Camera	Facial recognition, perimeter protection, throwing objects from building, motion detection2.0, ANPR, VCA
Facial Recognition	
Facial Detection and Analytics	Face picture comparison, human face capture, face picture search
Face Picture Library	Up to 16 face picture libraries, with up to 20,000 face pictures in total (each picture ≤ 4 MB, total capacity ≤ 1 GB)
Facial Detection and Analytics Performance	1-ch, 8 MP
Face Picture Comparison	4-ch
Motion Detection 2.0	
By Device	All channels, 4 MP (when enhanced SVC mode is enabled, up to 8 MP) video analysis for human and vehicle recognition to reduce false alarm
By Camera	All channels
Perimeter Protection	
By Device	1-ch, 4 MP (HD network camera, H.264/H.265) video analysis for human and vehicle recognition to reduce false alarm
By Camera	All channels
Video and Audio	
IP Video Input	4-ch
Incoming Bandwidth	40 Mbps
Outgoing Bandwidth	80 Mbps
HDMI Output	1-ch, 4K (3840 × 2160)/30 Hz, 2K (2560 × 1440)/60 Hz, 1920 × 1080/60 Hz, 1600 × 1200/60 Hz, 1280 × 1024/60 Hz, 1280 × 720/60 Hz
VGA Output	1-ch, 1920 × 1080/60 Hz, 1280 × 1024/60 Hz, 1280 × 720/60 Hz
Video Output Mode	HDMI/VGA simultaneous output
CVBS Output	N/A
Audio Output	1-ch, RCA (Linear, 1 KΩ)
Two-Way Audio	1-ch, RCA (2.0 Vp-p, 1 KΩ, using the audio input)
Decoding	
Decoding Format	H.265/H.265+/H.264+/H.264
Recording Resolution	12 MP/8 MP/6 MP/5 MP/4 MP/3 MP/1080p/UXGA/720p/VGA/4CIF/DCIF/2CIF/CIF/QCIF
Synchronous Playback	4-ch
Decoding Capability	AI on: 2-ch@12 MP (30 fps)/3-ch@8 MP (30 fps)/6-ch@4 MP (30 fps)/12-ch@1080p (30 fps) AI off: 2-ch@12 MP (30 fps)/4-ch@8 MP (30 fps)/8-ch@4 MP (30 fps)/16-ch@1080p (30 fps)
Stream Type	Video, Video & Audio
Audio Compression	G.711ulaw/G.711alaw/G.722/G.726/AAC
Network	
Remote Connection	128
API	ONVIF (profile S/G); SDK; ISAPI

Compatible Browser	IE11, Chrome V57, Firefox V52, Safari V12, Edge V89, or above version
Network Protocol	TCP/IP, DHCP, IPv4, IPv6, DNS, DDNS, NTP, RTSP, SADP, SMTP, SNMP, NFS, iSCSI, ISUP, UPnP™, HTTP, HTTPS
Network Interface	1 RJ-45 10/100/1000 Mbps self-adaptive Ethernet interface
Auxiliary Interface	
SATA	1 SATA interface
Capacity	Up to 16 TB capacity for each HDD
USB Interface	Front panel: 1 × USB 2.0; Rear panel: 1 × USB 2.0
Alarm In/Out	
General	
GUI Language	English, Russian, Bulgarian, Hungarian, Greek, German, Italian, Czech, Slovak, French, Polish, Dutch, Portuguese, Spanish, Romanian, Turkish, Japanese, Danish, Swedish Language, Norwegian, Finnish, Korean, Traditional Chinese, Thai, Estonian, Vietnamese, Croatian, Slovenian, Serbian, Latvian, Lithuanian, Uzbek, Kazakh, Arabic, Ukrainian, Kyrgyz , Brazilian Portuguese, Indonesian
Power Supply	12 VDC, 1.5 A
Consumption	≤ 10 W (without HDD)
Working Temperature	-10 °C to 55 °C (14 °F to 131 °F)
Working Humidity	10% to 90%
Dimension (W × D × H)	320 mm × 240 mm × 48 mm (12.6"× 9.4" × 1.9")
Weight	≤1 kg (without HDD, 2.2 lb.)
Certification	
CE	EN 55032: 2015, EN 61000-3-2, EN 61000-3-3, EN 50130-4, EN 55035: 2017
Obtained Certification	CE KC WEEE REACH ROHS BIS CB RCM IC LOA UKCA

**Note:*
**Alarm in/out can be optional for certain models. If you select a device model with "/Alarm4+1", then the device will have 4 alarm inputs and 1 alarm outputs.*

▪ Physical Interface

DS-7604NXI-K1(D)

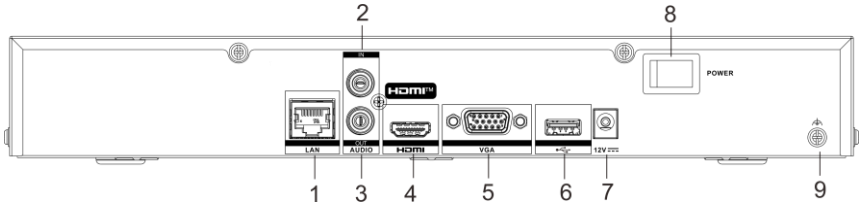

DS-7604NXI-K1(D)/Alarm4+1

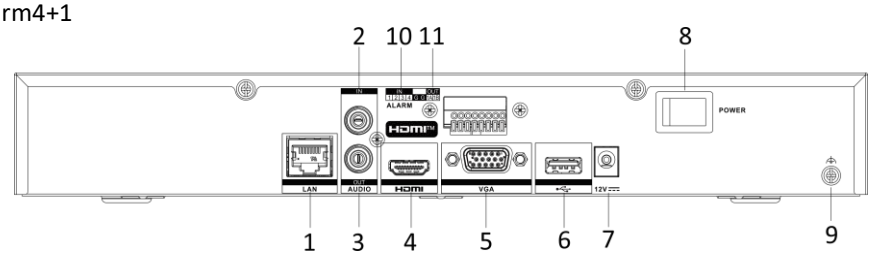

No.	Description	No.	Description
1	LAN network interface	7	Power supply
2	AUDIO IN	8	Power switch
3	AUDIO OUT	9	GND
4	HDMI interface	10	ALARM IN
5	VGA interface	11	ALARM OUT
6	USB interface		

▪ Available Model

DS-7604NXI-K1(D)

DS-7604NXI-K1(D)/Alarm4+1

▪ Dimension

DS-7604NXI-K1(D)

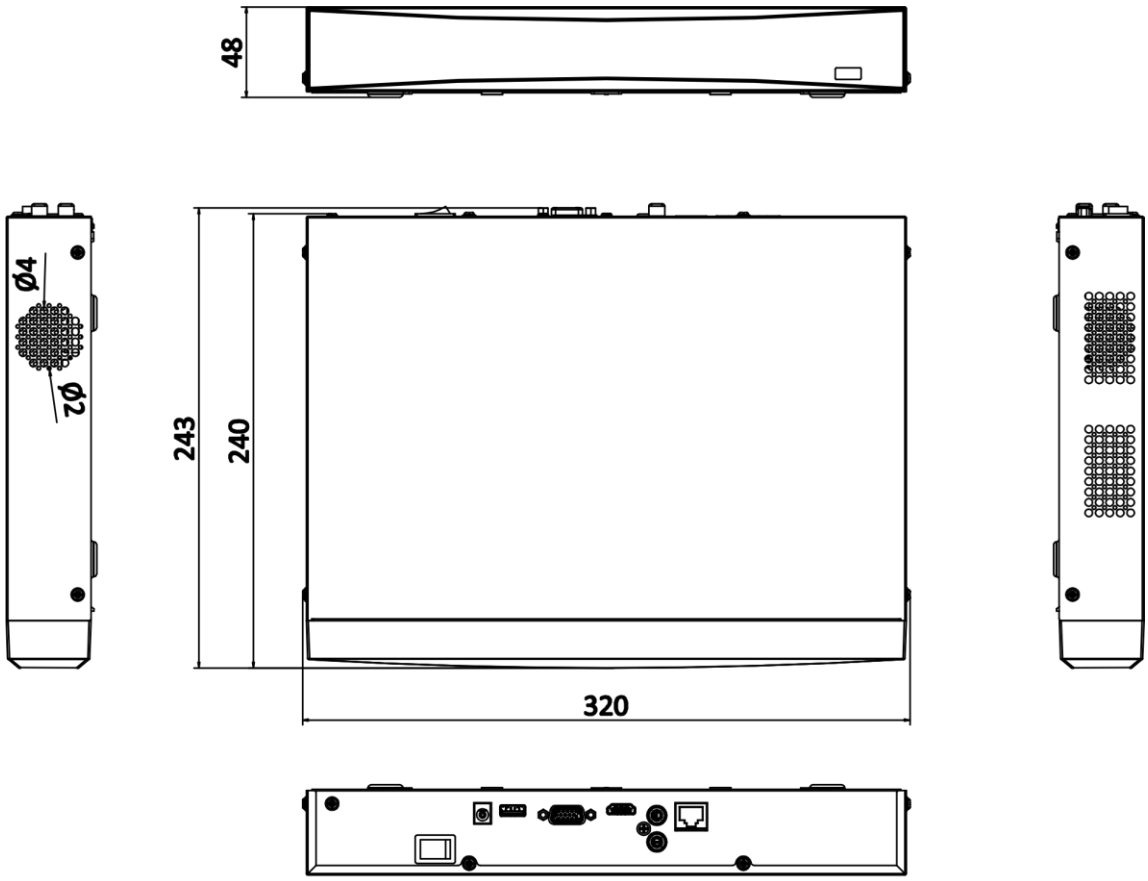

scale/1:1;Unit/mm

DS-7604NXI-K1(D)/Alarm4+1

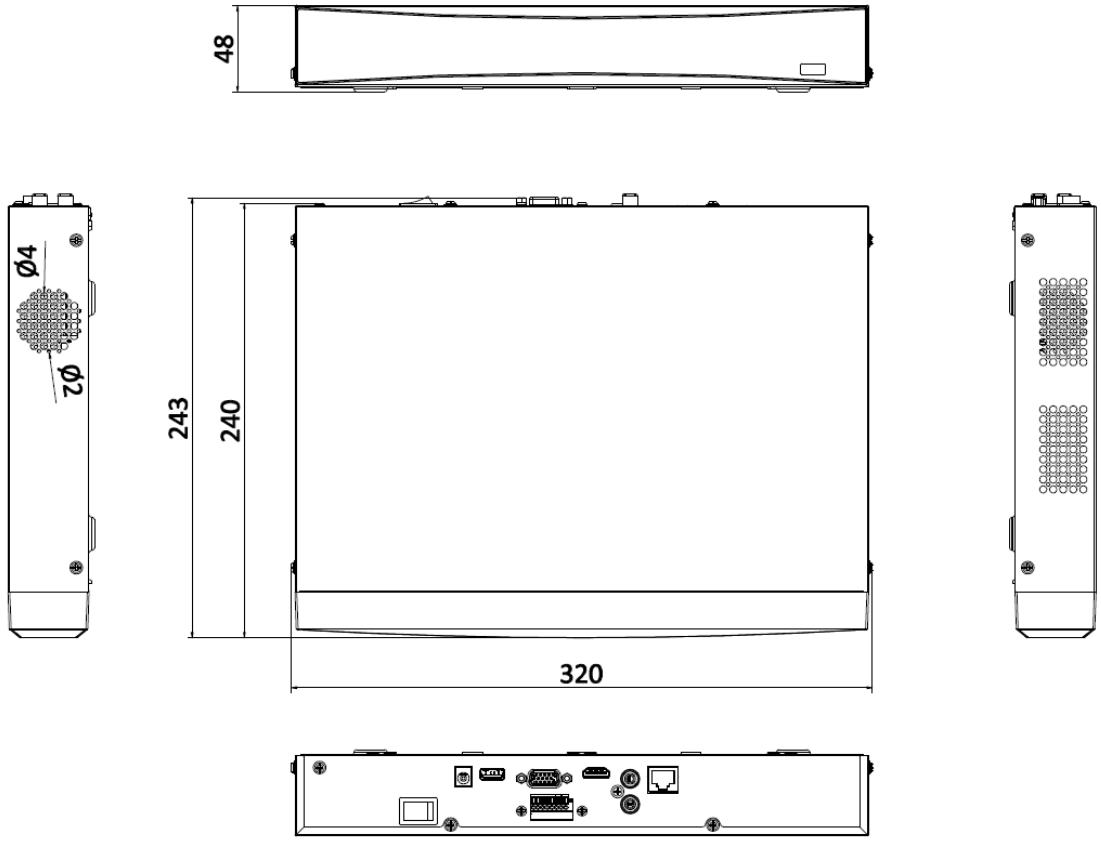

scale/1:1;Unit/mm

Headquarters
No.555 Qianmo Road, Binjiang District,
Hangzhou 310051, China
T +86-571-8807-5998
www.hikvision.com

Follow us on social media to get the latest product and solution information.

Hikvision HikvisionHQ HikvisionHQ Hikvision_Global Hikvision Corporate Channel hikvisionhq

© Hangzhou Hikvision Digital Technology Co., Ltd. Unless otherwise agreed, Hikvision makes no warranties, express or implied. We reserve the right to introduce modifications without notice.